TECHNICAL DATA SHEET

Small Co-Extruded Beam – Exterior

SARO TECH

Waterproof | Adaptable to Climate Changes | Environmentally Friendly | Easy Maintenance | Does not Attract Termites

ISOMETRIC VIEW

Dimensions in inches

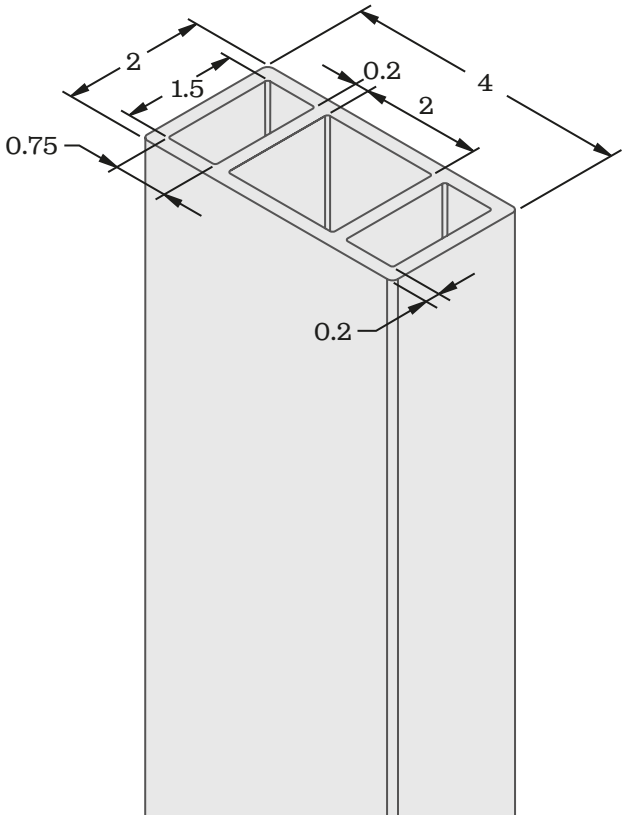

AVAILABLE COLORS

A13 Brushed Teak

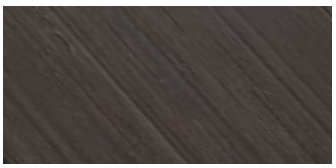

A18 Brushed IPE

A42 Brushed Walnut

A50 Brushed Antique

A66 Brushed Jet Black

MATERIAL SPECIFICATIONS

Material:	WPC (Wood Plastic Composite)
Application:	Exterior
Sales Presentation:	Piece
Length per piece:	9.5 ft
Weight per Piece:	15.4 lb

MATERIAL COMPOSITION AND PHYSICOCHEMICAL TESTS

Components	Results
Composition	50% Wood powder / 40% HDPE / 10% Chemical additives
Density gr/cm³	1.29 gr/cm³ (80.5 lb/ft³)
Water absorption (28 days of immersion)	4%
Linear thermal expansion	43.9x10–6 / C (24.4 x 10-6 / F)
Elastic recovery rate	81%
Formaldehyde content	Not detected
Abrasion resistance	31 mg/1000r
Artificial weathering resistance	After 2000 hours of exposure ΔE*=0.61 Gray Scale=4-5
Flexural strength	15.55 MPA
Load resistance (112 lbf)	2.90 mm
Modulus of elasticity	1892 MPA
Load capacity (16 in spacing)	3751N
Impact resistance	4.2 KJ/m2 (2.0 ft-lb / ft2)
Fire rating	C-s1, d0

PIECE DIMENSIONS

Height: 2 in - Width: 3.9 in - Length: 9.5 ft

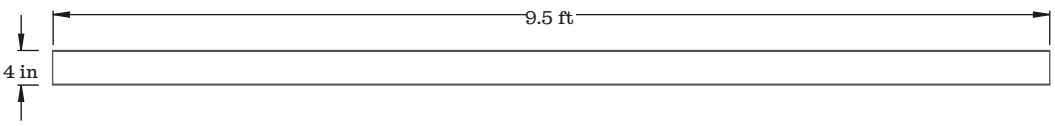

Dimensions in feet and inches

Front View

18 YEAR WARRANTY AGAINST STRUCTURAL DAMAGE